Endeavour

Proudly Aussie made

All dimensions in mm

EE11

1 & 3/4 Bowl Topmount Sink With Drainer

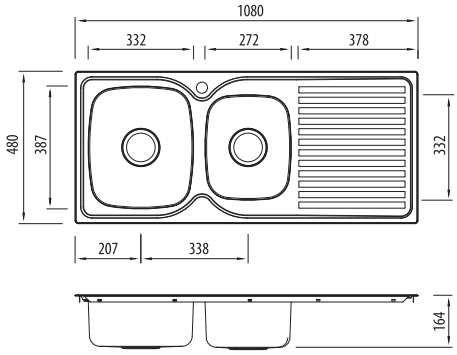

Specifications /

Sink size	1080W x 480H mm
Bowl size	Main Bowl 330W x 385H x 155D / 17L
	3/4 Bowl 270W x 330H x 155D / 12L
Construction	2 piece, bowls and drainer seam welded
Material	304 grade, 18/10 polished stainless steel (0.8 mm thick)
Installation	Topmount
Fixings	Adjustable clips supplied, and sealing gasket fitted
Min cabinet size	700 mm
Tap holes	1 tap hole (for no tap hole order product code "EE10")
Waste fittings	2 x 90 mm basket wastes included
Overflow	Special order option available
Carton size	1120 x 520 x 190 mm
Weight	7.5 kg
Warranty	Lifetime manufacturer's warranty (refer to oliveri.com.au)
Maintenance and care instructions	All surfaces should be cleaned with mild liquid detergent or soap and water. To maintain the shine on your Oliveri stainless steel sink, we recommended the use of any of the easy to obtain, non-abrasive stainless steel cleaners or metal polishes.

Included accessories /

AC14
Basket Waste

AC14
Basket Waste

For more information call 1300 13 7465 or visit oliveri.com.au

BATHROOM COLLECTIVE

Phone Number: (02) 9011-5711

® Registered trademark of Oliveri Solutions. Under its policy of ongoing product development Oliveri Solutions may from time to time change product specification without notice. All dimensions given are approximate and should be checked prior to installation. See oliveri.com.au for installation and warranty details.