Flinders

FL172

Double Bowl Topmount Sink With Drainer

AUSTRALIAN MADE

All dimensions in mm

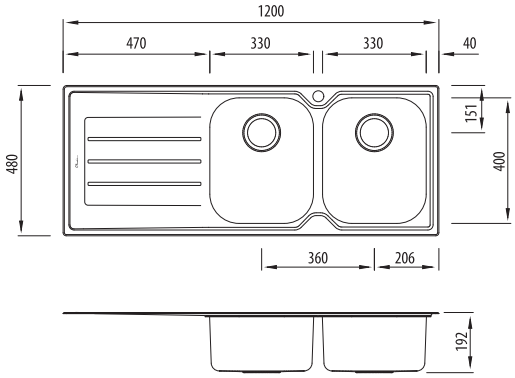

Specifications /

Sink size	1200W x 480H mm
Bowl size	Main Bowl 330W x 400H x 180D / 21L
	Main Bowl 330W x 400H x 180D / 21L
Construction	2 piece, bowls and drainer seam welded
Material	304 grade, 18/10 polished stainless steel (0.9 mm thick)
Installation	Topmount recommended
Fixings	Adjustable clips and sealing foam supplied
Min cabinet size	800 mm
Tap holes	Available 0 or 1 tap hole (specify when ordering)
Waste fittings	2 x 90 mm basket wastes included
Overflow	Not available
Carton size	1210 x 490 x 200 mm
Weight	8.5 kg
Warranty	Lifetime manufacturer's warranty (refer to oliveri.com.au)
Maintenance and care instructions	All surfaces should be cleaned with mild liquid detergent or soap and water. To maintain the shine on your Oliveri stainless steel sink, we recommended the use of any of the easy to obtain, non-abrasive stainless steel cleaners or metal polishes.

Included accessories /

AC14
Basket Waste

AC1820
Colander

AC15
Bamboo Board

For more information call 08 8348 6444 or visit oliveri.com.au

BATHROOM COLLECTIVE

Phone Number: (02) 9011-5711

® Registered trademark of Oliveri Solutions. Under its policy of ongoing product development Oliveri Solutions may from time to time change product specification without notice. All dimensions given are approximate and should be checked prior to installation. See oliveri.com.au for installation and warranty details.

Revision date: 13/02/2025