PRODUCT SPECIFICATION

30564
CASCADE BASIN MIXER, SWIVEL MID 140H

FEATURES

- WELS 5* 6 lpm
- Swivel spout reach 156 mm
- 2 stage Flowstep™ valve
- Tap Hole 34-35 mm
- Spout height 140 mm
- WELS registration number T41035

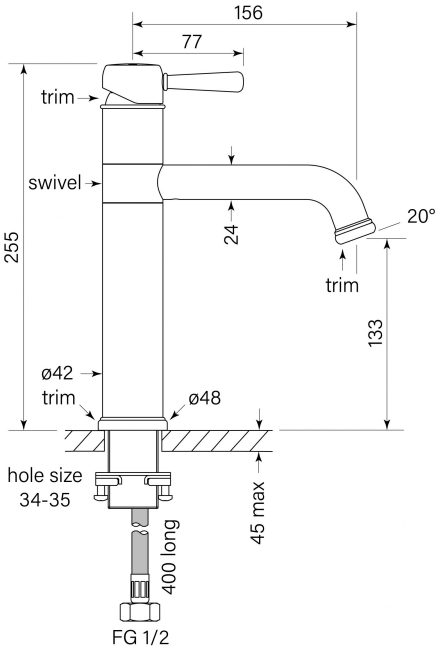

BATHROOM COLLECTIVE

Phone Number: (02) 9011-5711