PRODUCT SPECIFICATION

30729

PEGASI WALL SPA SPOUT 200 SWIVEL

FEATURES

- Free flow
- Swivel spout reach 200 mm
- Recessed flow straightener

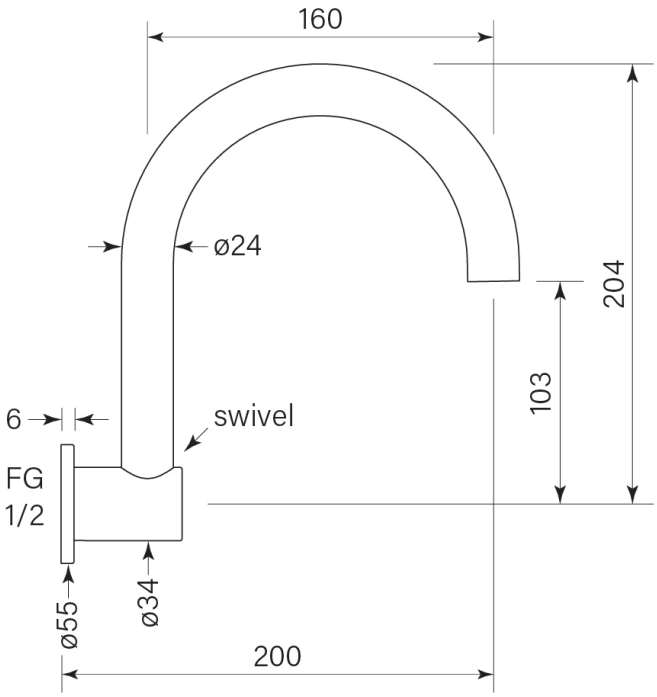

BATHROOM COLLECTIVE

Phone Number: (02) 9011-5711