PRODUCT SPECIFICATION

35304
ZERO KNURL SINK SET

FEATURES

- WELS 4* 7.5lpm
- Quarter turn ceramic cartridges
- Fine knurled texture on handles
- Swivel spout with 220mm reach

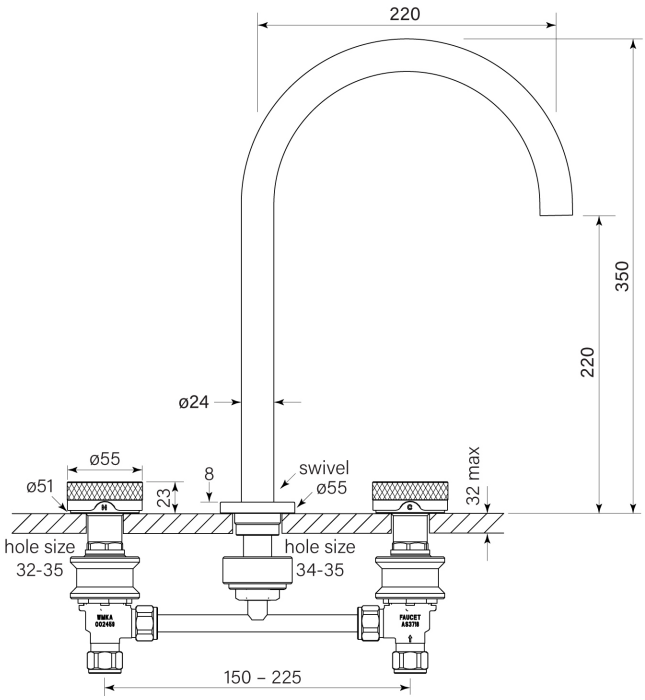

BATHROOM COLLECTIVE

Phone Number: (02) 9011-5711