PRODUCT SPECIFICATION

35136
ZEOS FLOOR BATH MIXER W. HANDSHOWER

FEATURES

- Solid brass handle
- Free flow
- WELS 3* 9lpm (hand shower)
- Slim 90mm square brass hand shower
- Recessed flow straightener
- Swivel spout reach 204 mm
- 2 stage flow step cartridge
- Includes Logikit™ body
- To upgrade to the No Pin Handle, order either 34380 smooth, or 34381 knurled handle along with this mixer and we will supply assembled

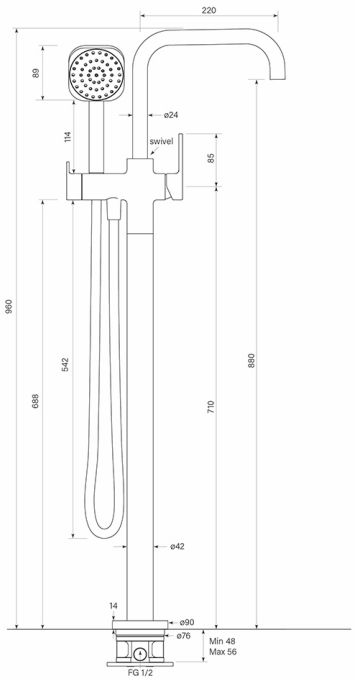

BATHROOM COLLECTIVE

Phone Number: (02) 9011-5711