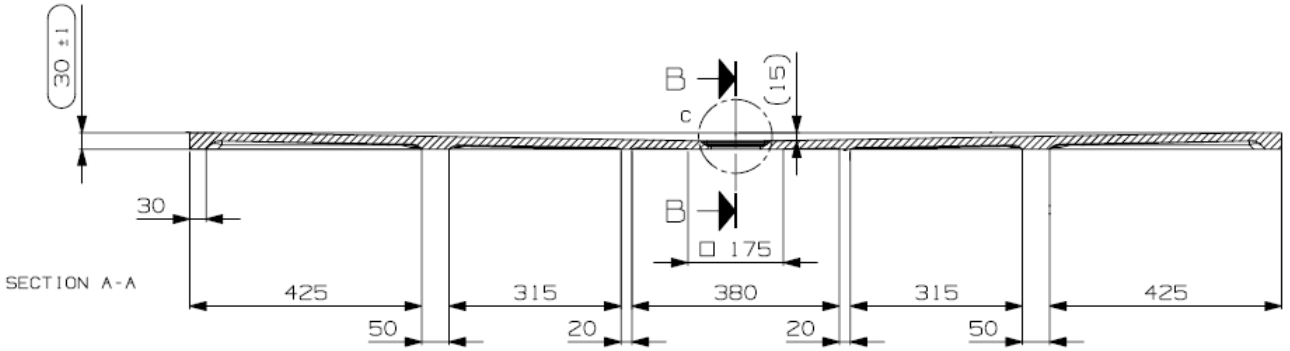

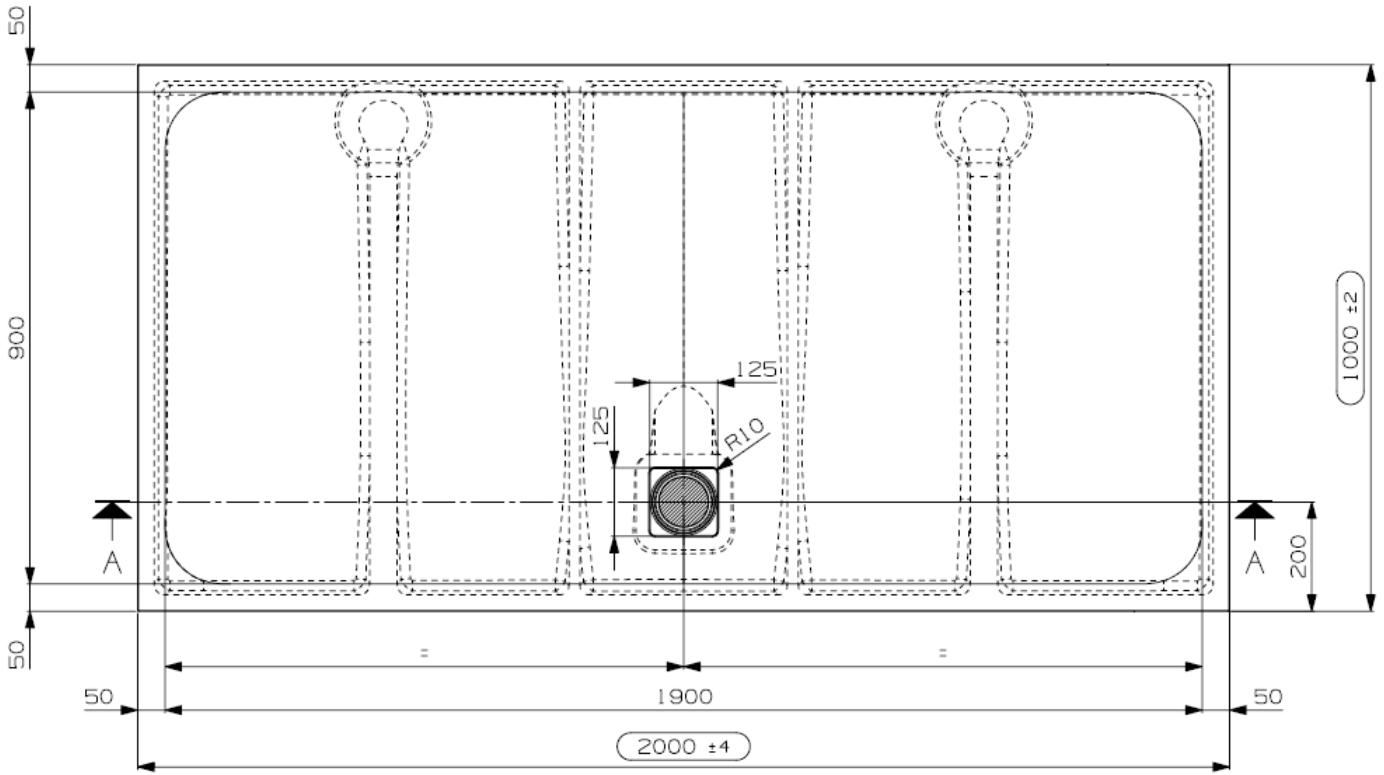

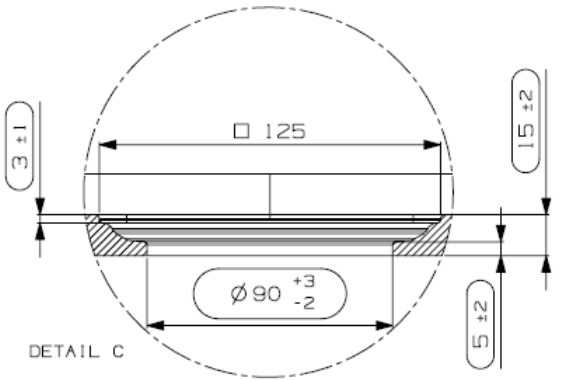

DOMUS LIVING

DOMUSTONE SHOWER TRAYS
MODEL: PIETRA
SIZE: 1000X2000 mm
WEIGHT: 78 KG

BATHROOM COLLECTIVE

Phone Number: (02) 9011-5711