Suba

Lever wall bath mixer outlet system 160mm outlet

SUSSEX

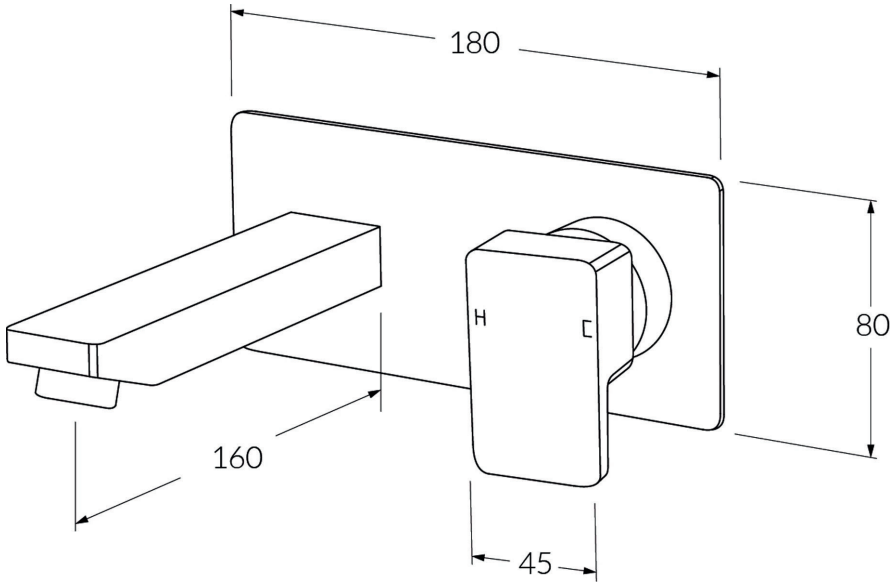

Product code

BLMOS160RH

Product features

- Designed and manufactured in Australia
- All brass construction
- 35mm ceramic disc cartridge
- Incorporating Sussex Masterfit
- Available in a range of high quality, durable finishes inc. LUXPVD®
- Minimal, refined design to complement any contemporary space
- Matching tapware, showers and accessories

Warranty

15 Year overall warranty.
Refer to Warranty sheet for specific information.

Pressure rating

300 - 500kPa

Temperature rating

1 - 65°C

BATHROOM COLLECTIVE

Phone Number: (02) 9011-5711

AS/NZS 3718:2005
LIC. 20081

While we aim to ensure the specifications shown are correct at time of printing, Sussex Taps reserves the right to make modifications without prior notice. Always use the physical product for accurate measurements. Dimensions are subject to change without notice. All measurements are shown in millimetres.

Copyright © Sussex Taps