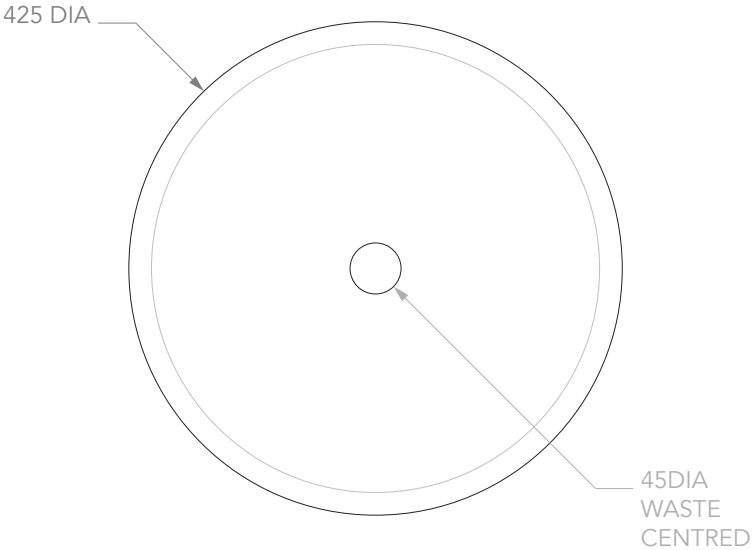


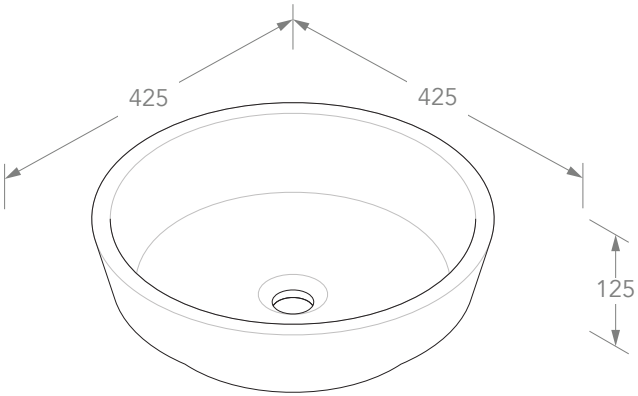


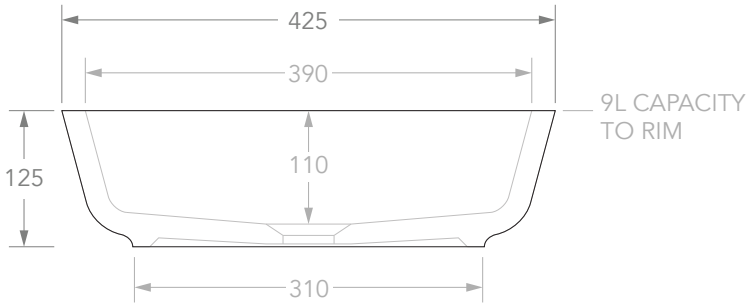


Adp

**BATHROOM** COLLECTIVE

Phone Number: (02) 9011-5711

| | | | |
|---|---|---|---|
| PRODUCT | RESORT | MATERIAL | CERAMIC |
| CODE | TOPCRES** | COLOUR | ** GLOSS WHITE (WH), MATTE BLACK |
| STYLE | ABOVE COUNTER | FINISH | (BK) |
| DIMENSIONS | 425DIA X 125H | | |
| CAPACITY | 9L TO RIM | | |
| VERSION 3 | DATE 20/08/2021 | | |

NOTES:
DUE TO THE MANUFACTURING NATURE OF CERAMICS, +/-5MM VARIATION IN SIZE AND DETAIL CAN BE EXPECTED.
DO NOT DRILL OR ROUGH IN UNTIL YOU HAVE RECEIVED AND MEASURED YOUR PRODUCT.
BASIN SUITS 32MM WASTE. ADP UNIVERSAL PLUG AND WASTE RECOMMENDED (SOLD SEPARATELY).
BASIN CUTOUT IS A 75 DIAMETER HOLE.
ALL DIMENSIONS ARE IN MILLIMETRES. DO NOT MEASURE FROM DRAWING.