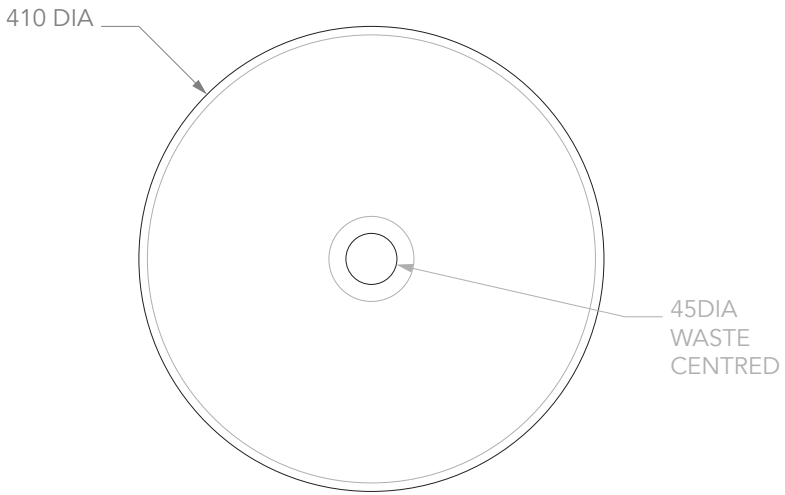

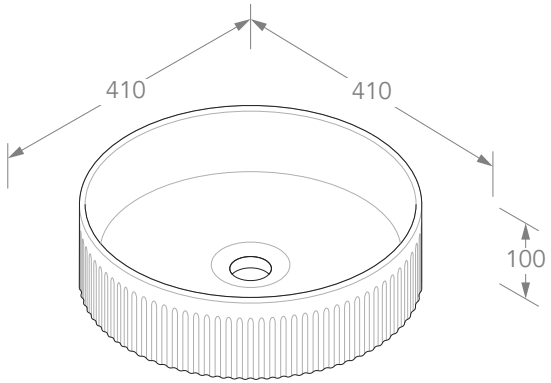

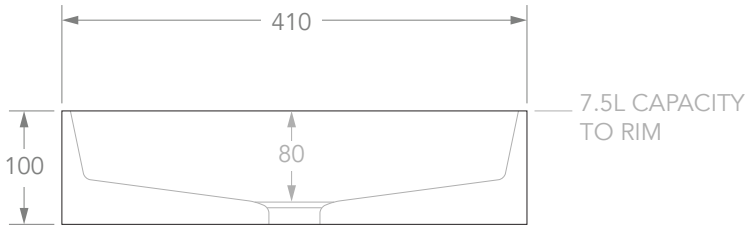

Adp

BATHROOM COLLECTIVE

Phone Number: (02) 9011-5711

PRODUCT	ROUND FLUTED	MATERIAL	CERAMIC
CODE	TOPCRFL405GW	COLOUR	WHITE
STYLE	ABOVE COUNTER	FINISH	GLOSS
DIMENSIONS	410DIA X 100H		
CAPACITY	7.5 TO RIM		
VERSION 2	DATE 20/08/2021		

NOTES:
DUE TO THE MANUFACTURING NATURE OF CERAMICS, +/-5MM VARIATION IN SIZE AND DETAIL CAN BE EXPECTED.
DO NOT DRILL OR ROUGH IN UNTIL YOU HAVE RECEIVED AND MEASURED YOUR PRODUCT.
BASIN SUITS 32MM WASTE. ADP UNIVERSAL PLUG AND WASTE RECOMMENDED (SOLD SEPARATELY).
BASIN CUTOUT IS A 75 DIAMETER HOLE.
ALL DIMENSIONS ARE IN MILLIMETRES. DO NOT MEASURE FROM DRAWING.